Product data sheet

Care Solutions · Cavere Care

NORMBAU
PASSION FOR CARE

Cavere Care Shower handrail,
with movable shower handrail

Article number: 7486119091

Product image

Technical specifications

Product group	7000
Product	Shower handrail, with movable shower handrail
Axle dimension a1	1100 mm
Axle dimension a2	1100 mm
Axle dimension a3	1200 mm
Fixing type	single-point mounting
Fixing points	5 Piece
Material	aluminium
Surface	scratch-resistant powder coating with antibacterial protection (except 091 Carbon black)
Colour	available in Cavere colours
Version	right
Loading	max. 150kgs

Technical drawing

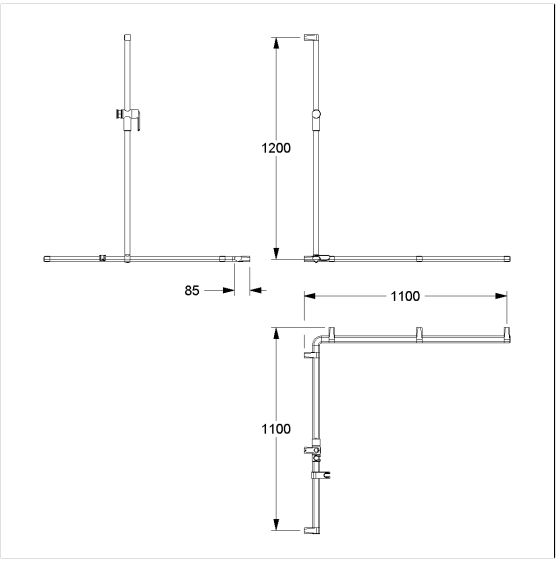

Product description

- Cavere Care as an award-winning product family with excellent design for all requirements
- ergonomic by trigonometric handle contour
- Shower head holder for one-handed operation with easy adjustment to any height and angle, maintenance-free with self-adjusting clamp
- Additional maintenance-free shower head holder for hooking onto the horizontal handrail for optimized reach while seated and during care assistance
- Mounting cone of both hand shower holders with plastic insert, suitable for various hand shower types
- with sealing elements for sealing of the drilling points according to German standard DIN 18534-1
- single-point wall attachment with 3mm tolerance compensation (= ffl 1.5mm) for an easy and safe installation,
- concealed screw fixing
- In case of lightweight partition walls a backfill made of min. 30mm hardwood is needed
- produced in accordance with Regulation (EU) 2017/745 on medical devices
- CE-certified
- meets the requirements of German standard DIN 18040 and Austrian standard ÖNORM B 1600
- supplied with stainless steel hexagon head screws Ø 6 x 100 mm according to DIN 571 and dowels

MD

091 092 093 095 096

PDF-Datasheet. All data without guarantee. Copyright NORMBAU, generated 28.04.2026

ALLEGION