Product data sheet

Care Solutions

Care Fixing set,
for fixing in front of the wall with panels and lightweight partition walls (with backfill)

Article number: 7470010000

Product image

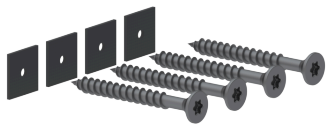

Technical specifications

Product group	7000
Product	Fixing set, for fixing in front of the wall with panels and lightweight partition walls (with backfill)
Type of wall	In front of the wall with panels and integrated mounting plate made of hardwood. Lightweight partition walls, made of gypsum, flake board and hardboard with a multilayer laminated wood back lining measuring at least 20mm thick, which must be adequately fixed to the supporting structure.
Material & scope of delivery	4 countersunk wood screws 10mm dia. x 90mm (Torx T40) made of stainless steel A2-AISI 304,4 sealing elements for sealing of the drillingpoints (DIN 18534-1)
Colour	Colourless (000)

Technical drawing

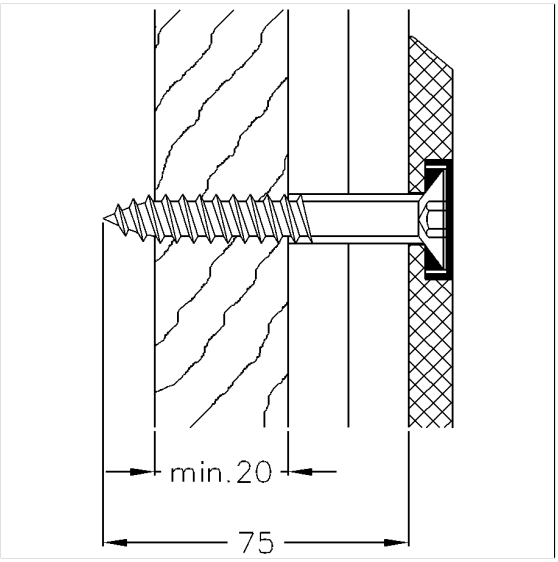

Product description

- suitable for:
  Cavere Care: wall-/lift-up support rails vario, base plate with cover plate blind vario, lift-up shower seat and Backrest for Lift-up support rails
  Inox Care: wall-/lift-up support rails vario and base plate with cover plate blind vario
  Nylon Care: wall-/lift-up support rails vario and base plate with cover plate blind vario
  Verso Care Duo: lift-up support rails vario
  Ascento: Modular Seating Solution
- with sealing elements for sealing of the drilling points according to German standard DIN 18534-1
- installation has to be carried out by professionals

000

PDF-Datasheet. All data without guarantee. Copyright NORMBAU, generated 15.01.2026