Product data sheet

Care Solutions

NORMBAU
PASSION FOR CARE

Care Fixing set,
for fixing in front of the wall with panels and lightweight partition walls (with backfill)

Article number: 0447750000

Product image

Technical specifications

Product group	2000
Product	Fixing set, for fixing in front of the wall with panels and lightweight partition walls (with backfill)
Short name	MS 4.9 C 3
Type of wall	In front of the wall with panels and integrated mounting plate made of hardwood. Lightweight partition walls, made of gypsum, flake board and hardboard with a multilayer laminated wood back lining measuring at least 20mm thick, which must be adequately fixed to the supporting structure.
Material & scope of delivery	3 x countersunk wood screws Ø 10 x 90 T40, A2-AISI 304
Colour	Colourless (000)

Technical drawing

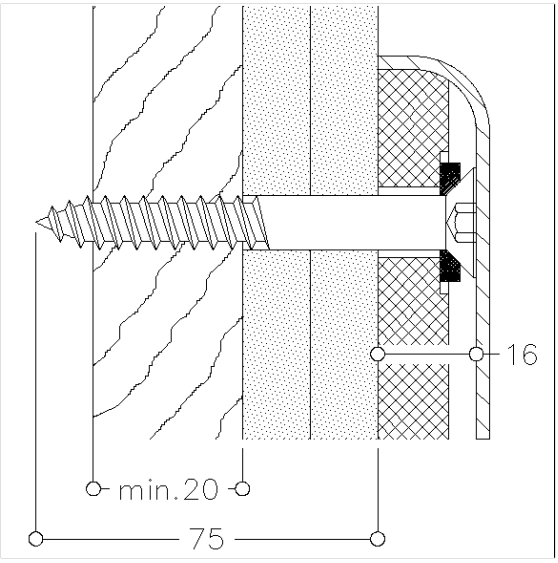

Product description

- suitable for:
  Nylon Care 300 wall-/lift-up support rail, Mounting plate for lift-up shower seat and shower guard rail
  Nylon Care 400 wall-/lift-up support rail and Mounting plate for lift-up shower seat
  Special Care Adipositas: lift-up support rail
- installation has to be carried out by professionals

000

PDF-Datasheet. All data without guarantee. Copyright NORMBAU, generated 15.01.2026

ALLEGION