Product data sheet

Care Solutions · Nylon Care 300

NORMBAU
PASSION FOR CARE

Nylon Care 300 Lift-up support rail,
with floor support

Article number: 4300434018

Product image



Technical specifications

Product group	0700
Product	Lift-up support rail, with floor support
Length	900 mm
Fixing height	800 mm
Diameter	34 mm
Material	polyamide
Surface	high gloss with antibacterial protection
Colour	available in Dark grey (018) and White (019)
Version	left and right
Loading	max. 100kgs according to ISO17966:2016, statically tested up to 150kgs

Technical drawing

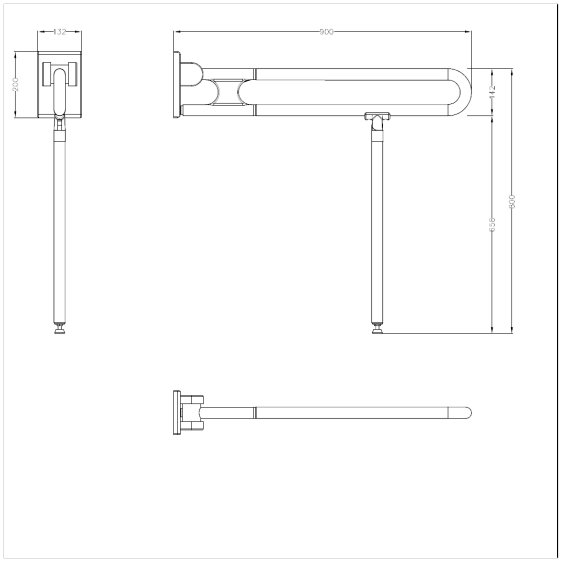

Product description

- Nylon Care - a well-tried and proven product family with a wide range of variants, three product series suiting many different requirements
- with adjustable brake
- with durable maintenance-free, friction bearings
- with non-corrosive steel core throughout
- floor support with non-slip floor contact
- with steel reinforced mounting plate for three-point fixing and Nylon cover
- Floor support serves as a support in case of insufficient wall condition, thus the resulting forces on the wall fixing can be reduced
- concealed screw fixing
- In case of lightweight partition walls a backfill made of min. 30mm hardwood is needed
- retrofittable with Toilet roll holder, optional with antibacterial protection 4300665
- produced in accordance with Regulation (EU) 2017/745 on medical devices
- CE-certified
- Fixing set has to be determined according to conditions on site, is to be ordered separately

MD

Antibac

018 019

PDF-Datasheet. All data without guarantee. Copyright NORMBAU, generated 19.08.2026

ALLEGION