Product data sheet

Care Solutions · Cavere Care Chrome

NORMBAU
PASSION FOR CARE

Cavere Care Chrome Lift-up support rail vario,
with remote control

Article number: 9447284395

Product image

Technical specifications

Product group	7000
Product	Lift-up support rail, with remote control
System	vario, with base plate
Length	850 mm
Material	aluminium, base plate, made of stainless steel
Surface	chrome finish grip profile, scratchproof antibacterial powdercoated brackets
Colour	available in colours Chrome white (392) and Chrome metallic anthracite (395)
Version	right
Loading	max. 100 kgs

Technical drawing

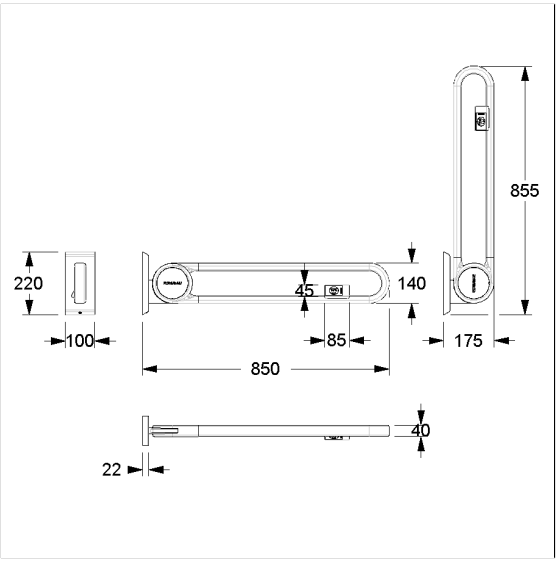

Product description

- Cavere Care as an award-winning product family with excellent design for all requirements
- ergonomic by trigonometric handle contour
- with adjustable brake
- with durable maintenance-free, friction bearings
- 868,4 MHz wireless remote control for WC flush, casing measurements: 85 x 46 x 16mm, compatible for Geberit: 115.867.00.1,115.869.00.1, 115.897.00.1, 115.898.00.1, 115.867.SN, 115.869.SN, Grohe: 38759SD0, Sanit: 05.042.00..0000, 05.014.00..0000,05.015.00..0000, Tece: 9.240.354, 9.240.355, Viega: 696177
- easy installation or removing by connecting / disconnecting to base plate
- concealed screw fixing
- In case of lightweight partition walls a backfill made of min. 20mm hardwood is needed
- retrofitting with Toilet roll holder 7449110
- certified by TÜV PRODUCT SERVICE
- CE-certified
- meets the requirements of German standard DIN 18040 and Austrian standard ÖNORM B 1600
- Fixing set has to be determined according to conditions on site, is to be ordered separately

Vario

392 395

PDF-Datasheet. All data without guarantee. Copyright NORMBAU, generated 24.12.2023

ALLEGION