Product data sheet

Care Solutions

Care Fixing set,
for fixing in front of the wall with panels and lightweight partition walls (with backfill)

Article number: 0448950000

Product image

Technical specifications

Product group	2000
Product	Fixing set, for fixing in front of the wall with panels and lightweight partition walls (with backfill)
Short name	MS 4.8 C 4
Type of wall	In front of the wall with panels and integrated mounting plate made of hardwood. Lightweight partition walls, made of gypsum, flake board and hardboard with a multilayer laminated wood back lining measuring at least 20mm thick, which must be adequately fixed to the supporting structure.
Material & scope of delivery	2 x hexagon head screw Ø 10 x 80 SW17, A2-AISI 304
Colour	Colourless (000)

Technical drawing

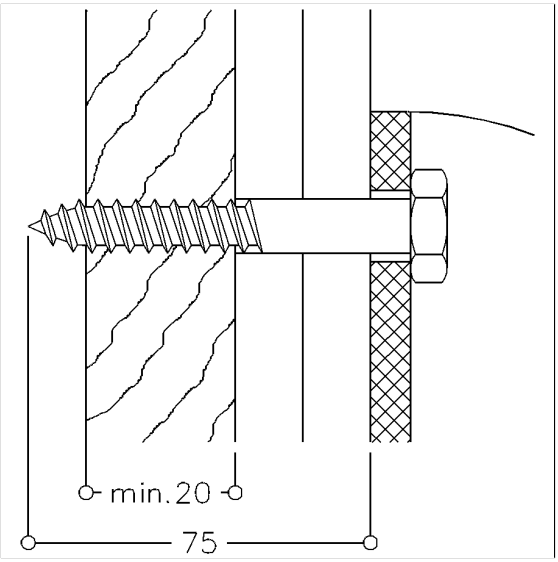

Product description

- suitable for:
  Inox Care Lift-up shower seat
  Nylon Care 300 Lift-up shower seat
  Nylon Care 400 Lift-up shower seat, Lift-up shower seat with floor support
  Special Care Adipositas Lift-up shower seat
- installation has to be carried out by professionals

000

PDF-Datasheet. All data without guarantee. Copyright NORMBAU, generated 15.01.2026