Product data sheet

Care Solutions · Nylon Care 300

NORMBAU
PASSION FOR CARE

Nylon Care 300 Shower handrail,
with shower head rail

Article number: 0300821014

Product image

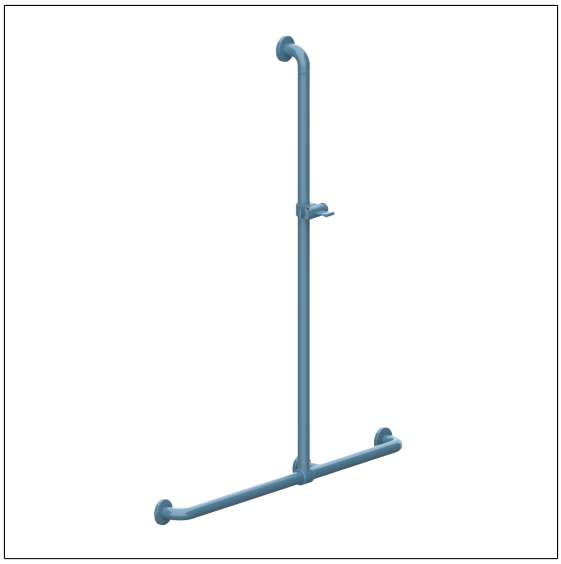

Technical specifications

Product group	0700
Product	Shower handrail, with shower head rail
Axle dimension a2	943 mm
Axle dimension a3	1158 mm
Fixing type	rosettes mounting
Fixing points	4 Piece
Diameter	34 mm
Material	polyamide
Surface	high gloss
Colour	available in nylon colours
Version	left and right
Loading	max. 175kgs

Technical drawing

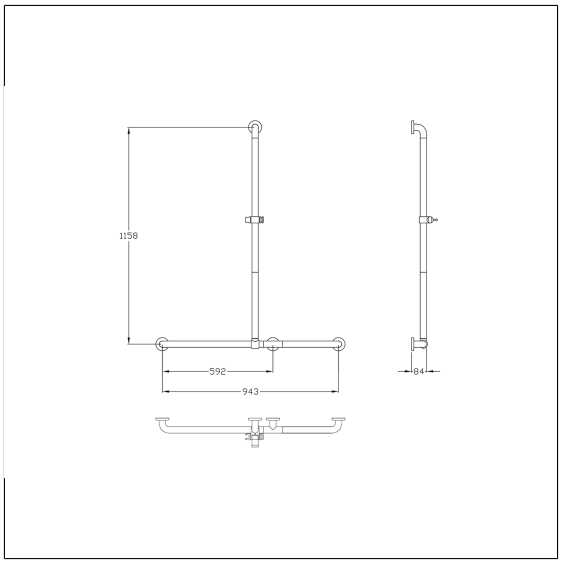

Product description

- Nylon Care - a well-tried and proven product family with a wide range of variants, three product series suiting many different requirements
- with non-corrosive steel core throughout
- Shower head holder with easy adjustment to any height and angle, self-adjusting clamp maintenance-free
- with long operating handle and multi-purpose side hook
- Shower head holder suitable for various hand shower types
- with Rose Gasket for sealing of the drilling points according to German standard DIN 18534-1
- with plastic rose Ø 70mm for concealed screw fixing and glass fiber reinforced plastic base
- In case of lightweight partition walls a backfill made of min. 20mm hardwood is needed
- produced in accordance with Regulation (EU) 2017/745 on medical devices
- CE-certified
- meets the requirements of German standard DIN 18040 and Austrian standard ÖNORM B 1600

MD

014 015 016 018 019 020 022 028 035 067

PDF-Datasheet. All data without guarantee. Copyright NORMBAU, generated 21.01.2026

ALLEGION