Product data sheet

Care Solutions

NORMBAU
PASSION FOR CARE

Nylon Care Lift-up support rail vario

Article number: 3500430022

Product image

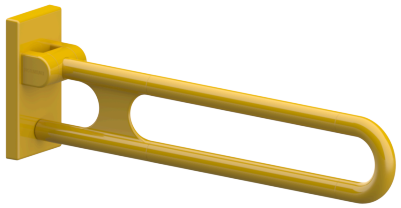

Technical specifications

Product group	3800
Product	Lift-up support rail
System	vario, with base plate
Length	725 mm
Diameter	34 mm
Material	polyamide, base plate, made of stainless steel
Surface	high gloss
Colour	available in nylon colours
Version	left and right
Loading	max. 100kgs according to ISO17966:2016, statically tested up to 150kgs

Technical drawing

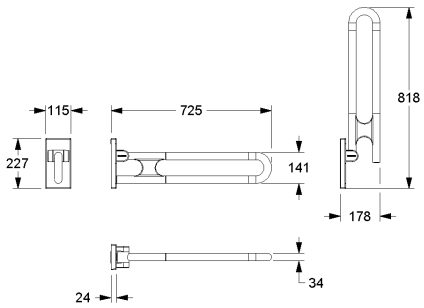

Product description

- Nylon Care - a well-tried and proven product family with a wide range of variants, three product series suiting many different requirements
- with adjustable brake
- with durable maintenance-free, friction bearings
- with non-corrosive steel core throughout
- space-saving thanks to compact design
- easy installation or removing by connecting / disconnecting to base plate
- concealed screw fixing
- sealing of the drilling points (DIN 18534-1) in conjunction with NORMBAU fixing sets 7470xxx
- In case of lightweight partition walls a backfill made of min. 30mm hardwood is needed
- retrofittable with Toilet roll holder, optional with antibacterial protection 4300665
- certified by TÜV PRODUCT SERVICE
- produced in accordance with Regulation (EU) 2017/745 on medical devices
- CE-certified
- meets the requirements of German standard DIN 18040 and Austrian standard ÖNORM B 1600
- Fixing set has to be determined according to conditions on site, is to be ordered separately

Vario

014 015 016 018 019 020 022 028 035 067

PDF-Datasheet. All data without guarantee. Copyright NORMBAU, generated 21.01.2026