Product data sheet

Care Solutions · Nylon Care 300

NORMBAU
PASSION FOR CARE

Nylon Care 300 Shower handrail

Article number: 0300831035

Product image

Technical specifications

Product group	0700
Product	Shower handrail
Angle	90 °
Axle dimension a1	767 mm
Axle dimension a2	767 mm
Fixing type	rosettes mounting
Fixing points	4 Piece
Diameter	34 mm
Material	polyamide
Surface	high gloss
Colour	available in nylon colours
Version	left and right
Loading	max. 175kgs

Technical drawing

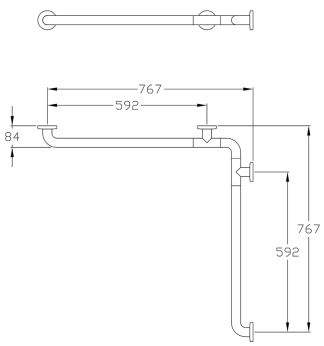

Product description

- Nylon Care - a well-tried and proven product family with a wide range of variants, three product series suiting many different requirements
- with non-corrosive steel core throughout
- with Rose Gasket for sealing of the drilling points according to German standard DIN 18534-1
- with plastic rose Ø 70mm for concealed screw fixing and glass fiber reinforced plastic base
- In case of lightweight partition walls a backfill made of min. 20mm hardwood is needed
- produced in accordance with Regulation (EU) 2017/745 on medical devices
- CE-certified
- meets the requirements of German standard DIN 18040 and Austrian standard ÖNORM B 1600

MD

014 015 016 018 019 020 022 028 035 067

PDF-Datasheet. All data without guarantee. Copyright NORMBAU, generated 21.01.2026

ALLEGION